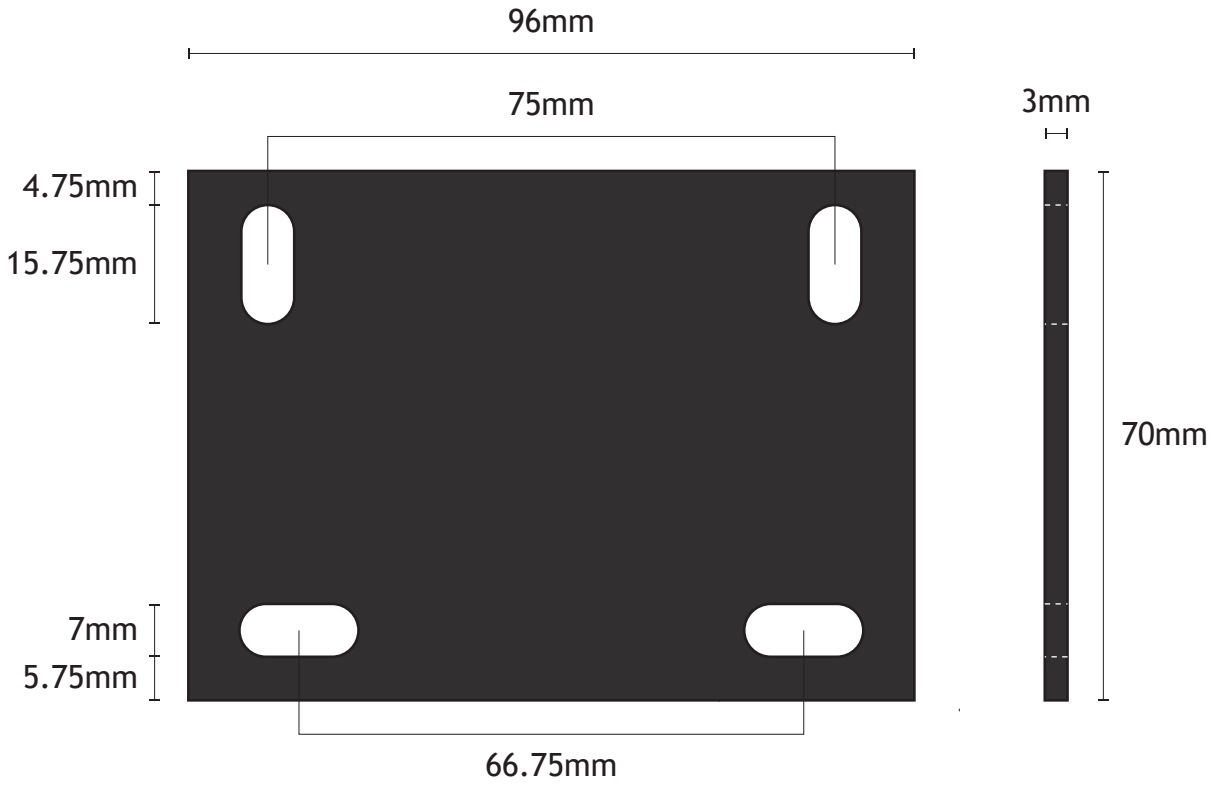

GAL Steel Mounting Bracket for MO Switch			Part Number 13065
Date	19th August 2020	Reeley Limited Unit 14 Monkspath Business Park Highlands Road Solihull B90 4NY	reeley limited
Created by	M. Watkins		
Scale	1:1		